# ITEMNO.:PELION PE1

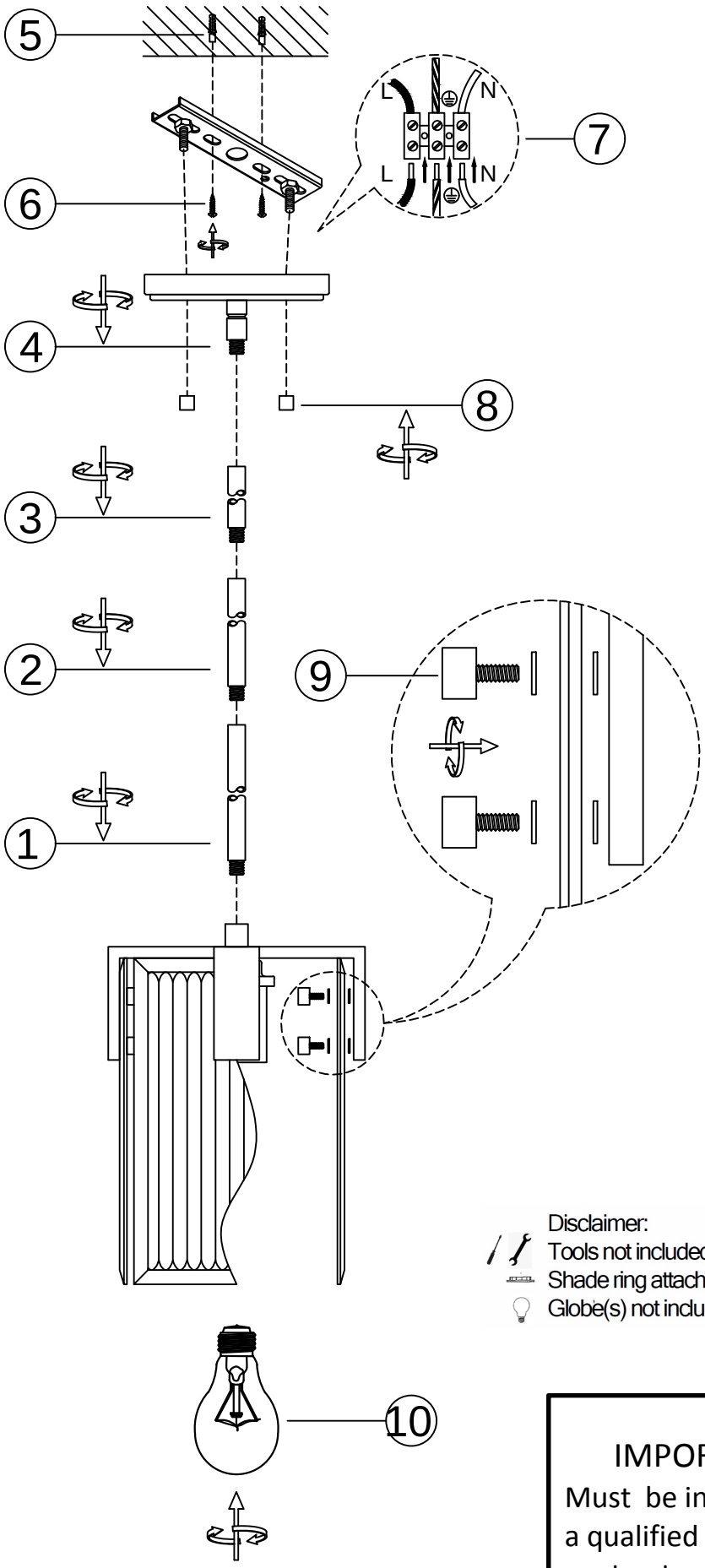


Disclaimer:
Tools not included
Shade ring attached on lamp holder
Globe(s) not included

IMPORTANT
Must be installed by a qualified electrical contractor.
Install in accordance with AS/NZS3000

240V ~ 50Hz E27 Max.25W x1

NOTE: GLOBE NOT INCLUDED

Telbix.