1W 25MM MINI 3 WAY INGROUND OR DECK LIGHTS

PRODUCT SPECIFICATIONS	
MATERIAL	316 STAINLESS STEEL OR SOLID BRASS
COLOUR / FINISH	STAINLESS STEEL, BLACK, BRASS & ANTIQUE BRASS
COLOUR TEMP	TRI COLOUR - 3000K | 4000K | 5500K
LUMEN OUTPUT	25LM | 35LM | 30LM
INPUT VOLTAGE	24V DC
BUILT IN LED	1W LED
DIMMING	NO
CRI	RA >90
BEAM ANGLE	36°
IP RATING	IP67
IK RATING	IK10
TRAFFICABLE	UP TO 500KGS
WARRANTY	5 YEARS REPLACEMENT

PRODUCT ORDERING	
HCP-271205	316 STAINLESS STEEL
HCP-272205	316 STAINLESS STEEL BLACK
HCP-275205	SOLID BRASS
HCP-276205	SOLID BRASS WITH ANTIQUE BRASS FINISH

Solid Brass fittings will naturally tarnish, Solid brass fittings with additional coatings (Antique Brass & Graphite) may tarnish through the coating when installed in outdoor environments

DIMENSIONS

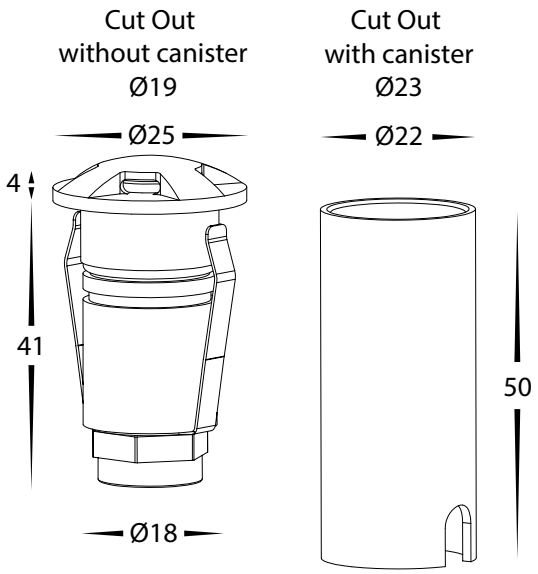

Web: www havitcommercial.com.au
Email: sales@havitcommercial.com.au
Phone: 02 9381 8383
ADDRESS: 8/133 Beauchamp Road, Matraville, N.S.W., 2036

Warranty Terms & Conditions

www.havitcommercial.com.au