DOMUS®

Date: February 27, 2024 4:14 pm

Dusk Spike MR11

3W LED Garden Spike Light

Description

The DUSK-SPIKE-MR11 Series Garden Spike Light offers a durable weatherproof solution to lighting up low level shrubs and plants where ambient lighting is required. Constructed from Solid Brass, and finished in a Bronze or Black finish. Complete with 3W MR11 LED 3000K lamp and requires a 12V DC Constant Voltage LED Driver. Backed by a 5 Year Warranty.

Specification Features

Input Voltage:	12V DC*
Power (W):	3W
IP rating (IP):	IP65
Lumens (lm):	Warm White 3000K - 240lm
CCT:	3000K
CRI:	≥80
Dimmable	No
Beam angle (°):	38°
Lifespan (hrs):	35,000hrs
Cable Length:	2 Metres

Requires: 12V DC Constant Voltage LED Driver (Wire in Parallel)

Diagrams / Additional

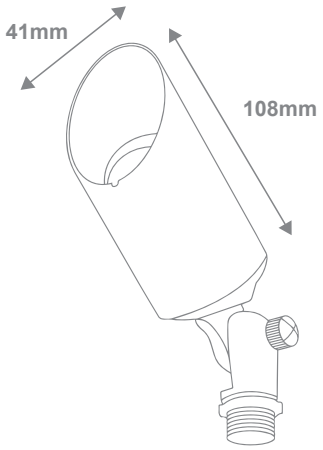

Water STOP Cable Joint

Item No.	Variant		CCT
	Blk	*Brz*	
DUSK-SPIKE-MR11	19120	19119	3000K

Suggested Replacement Lamps:

KEY-MR11-3-6000K **65017**

Domus 29-31 Richland Street. Kingsgrove NSW 2208 | Phone: (02) 9554 9600 | email: enquiries@domuslighting.com.au

Specification subject to change without prior notice.